This document is the property of Hatteland Technology AS.
This document and any authorized reproduction thereof, must not be used in any way against the interest of Hatteland Technology AS.
Any authorized reproduction, in whole or in part, must include this legend.

FRONT VIEW

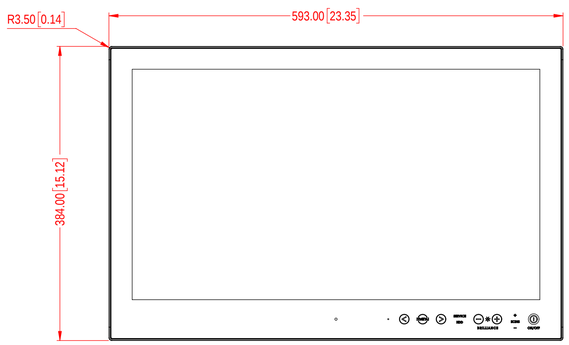

SIDE VIEW

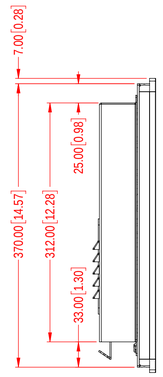

BACK VIEW

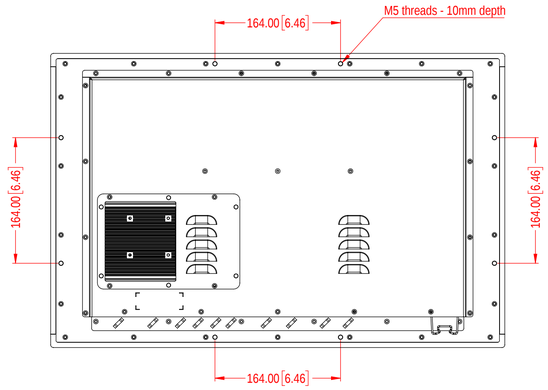

BOTTOM VIEW

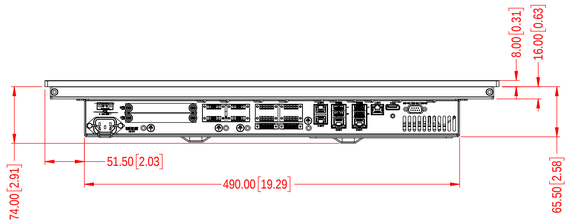

ISOMETRIC VIEW

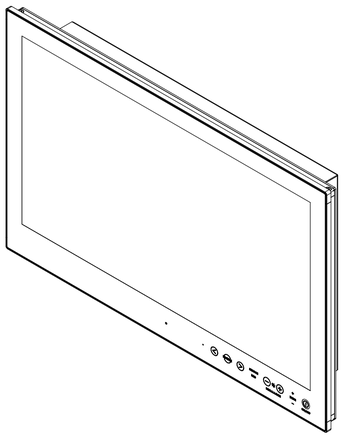

PANEL CUTOUT

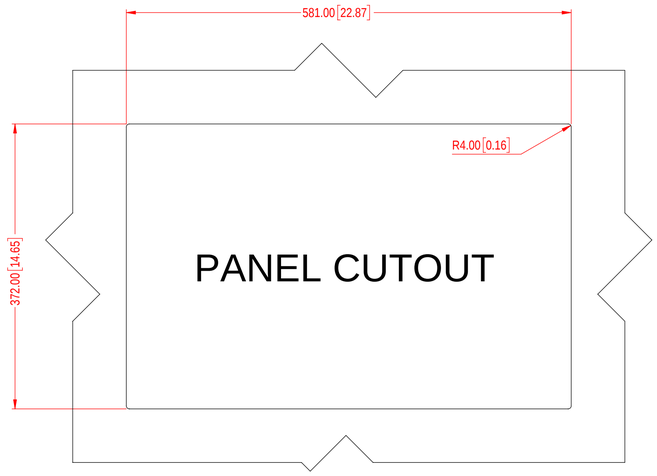

TOP VIEW

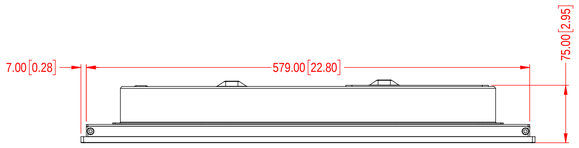

Units: mm [inches]

SALES DRAWING HD 24T22 MMC-M82-AAA02D

shown in this drawing, but measurements generally apply for all HD 24T22 MxC-Mxx-xxxxxx models

Creation date / by:	/	Projection:	A1	HATTELAND TECHNOLOGY an EMBRON Company
Last rev. date / by:	/		Scale: 1:4	
Hatteland Technology AS Eikeskogvegen 52 N-5570 Aksdal			Tolerance	Approved by: / Revision:
			ISO 2768-mK	Drawing number: A010067